## Warranty

PRETECH COMPANY warrants this product to be free from defects in material and workmanship of a period of twenty four months (24 months) from the date of shipment of the product or products to Purchaser. If reasonable proof of such defect is presented to the Company by the Purchaser within such period of time or if the Purchaser shall within such period of time return the defective product to the Company at the Purchaser's expense, the Company, at its option, shall either repair the product (or products) or supply a replacement product (or products) at no charge to the Purchaser. The Company does not assume any responsibility whatsoever beyond such obligation to repair or replace. This warranty does not apply to adjustments, normal wear or damage caused by: (a) neglect, lack of maintenance, accident, improper installation or abnormal service: (b) alteration of removal of parts: or (c) participating in racing. This warranty shall be in lieu of all other warranties, express or implied.

EXCEPT FOR THIS LIMITED EXPRESS WARRANTY, PRETECH COMPANY MAKES NO OTHER WARRANTIES OR REPRESENTATIONS, EXPRESS OR IMPLIES IN FACT OR IN LAW, AND AS TO ANY LIMITED WARRATNY WAHTSOEVER MADE, THE IMPLIED WARRANTY OF MERCHANTABILITY AND/OR FITNESS FOR A PARTICULAR PURPOSE IS HEREBEY EXPRESSLY EXCLUDED

The Purchaser also acknowledges that neither the Company nor any representatives shall have made representation or warranties of any kind, nature or description, express or implied, with respect to the system other than those specifically described in this agreement or any specifications supplies to the Purchaser by the Company in writing.

The Company shall not be liable for any loss, damage or expense of any kind or nature caused directly or indirectly by the product or the use thereof or for any loss of business or damage whatsoever and however caused except for the Company's obligation to repair or replace for two (2) years period as described herein. IN NO EVENT WILL PRETECH COMPANY BE LIABLE FOR ANY INCIDENTAL OR CONSEQUENTIAL DAMAGES FOR BREACH OF ANY EXPRESS OR IMPLIED WARRANTY RELATING TO THE PRODUCT (OR PRODUCTS). The Company shall under no circumstances be liable for more than the price of the product paid.

Claims shall be made under this warranty by giving notice in writing to the Company within the warranty period; otherwise such claims shall be void. The Company shall then arrange for inspection and repair, provided such service is covered under this warranty, the Purchaser shall, upon prior authorization of the Company, return the defective product with the transportation charges prepaid.

The Company reserves the right to change or improve product design without assuming any obligation to modify any previously manufactured product. This warranty gives the Purchaser specific legal rights. The Purchaser may also have other rights, which may vary, from state to state and from county to country.

There is no warranty stated or implied due to the unusual and extreme stresses placed on racing a high performance parts, and because we have no control over how they are installed and used.

# How to measure for replacement Steering Cables

A= Center line of wheel to gunwale (or deck, if routed downward)
B= Dash to Transom
C= Gunwale to centerline of cable connection at centered tiller.

## For Cable Install through Engine Tilt Tube:

Add A + B + C + 6”, then round **up** to next foot.

## For Cables Mounted Transom, Splashwell or Stringer:

Add A + B + C, subtract 6” and round **up** to next foot.

## For Rotary Steering Cable Replacement:

Measure plastic cable jacket in inches, add 18” and **round up** to next foot.

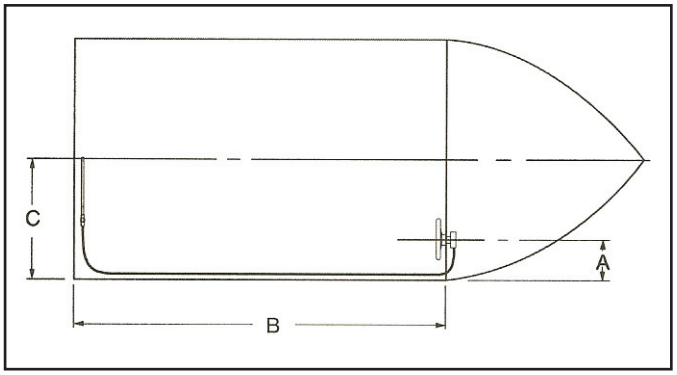


Cable routings may vary from this drawing. Confirm length by laying a garden hose or similar object along cable path and measure run from wheel to engine connection point.